Fundamentals of computing

Binary numbers (otherwise known as Base 2) are used to represent and store data in computers and other digital devices.

Computers, calculators, watches and televisions all use the binary system in order to control a complex series of switches in an electrical circuit which lead to the device either processing information or representing it as either sound or light.

Computers can't do anything until we tell them to. They were designed to make our lives easier.

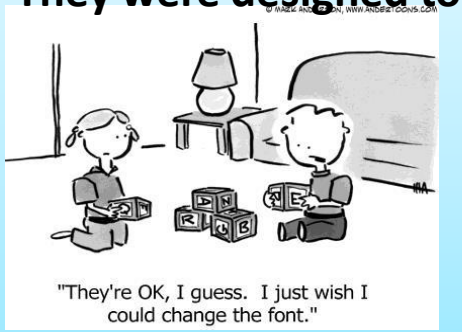

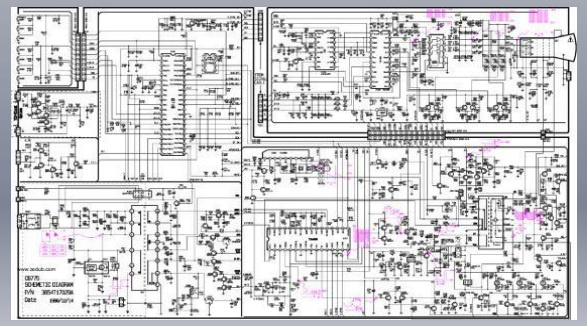

The Base 10 system uses ten symbols to represent numbers:

0 1 2 3 4 5 6 7 8 9

Where the place value of a number represents the multiplication of that number to the power of ten

For example:

The number 173.59 is equal to

$$1\times 10^2+7\times 10^1+3\times 10^0+5\times 10^{-1}+\times 10^{-2}=$$

$$1\times 100+7\times 10+3\times 1+5\times 0.1+9\times 0.01=173.59$$

The binary system uses 1 and 0 to control whether a current will or will not
flow in a circuit:
1 = ON / YES / TRUE
0 = OFF / NO / FALSE

The binary system can be used to represent all numbers as well as letters through the ASII system.

ASCII Code: Character to Binary

Letter	ASCII Code	Binary	Letter	ASCII Code	Binary
a	097	01100001	A	065	01000001
b	098	01100010	B	066	01000010
c	099	01100011	C	067	01000011
d	100	01100100	D	068	01000100
e	101	01100101	E	069	01000101
f	102	01100110	F	070	01000110
g	103	01100111	G	071	01000111
h	104	01101000	H	072	01001000
i	105	01101001	I	073	01001001
j	106	01101010	J	074	01001010
k	107	01101011	K	075	01001011
l	108	01101100	L	076	01001100
m	109	01101101	M	077	01001101
n	110	01101110	N	078	01001110
o	111	01101111	O	079	01001111
p	112	01110000	P	080	01010000
q	113	01110001	Q	081	01010001
r	114	01110010	R	082	01010010
s	115	01110011	S	083	01010011
t	116	01110100	T	084	01010100
u	117	01110101	U	085	01010101
v	118	01110110	V	086	01010110
w	119	01110111	W	087	01010111
x	120	01111000	X	088	01011000
y	121	01111001	Y	089	01011001
z	122	01111010	Z	090	01011010
			space		

Binary digit = Bit

A four bit system would be composed of 4 numbers each multiplied by a base of 2 and can be used to represent numbers between 0-15.

Example:		8		4		2		1
		1		0		0		1
	=	8	+	0	+	0	+	1
	=	9						

An 8 bit system would be composed of 8 binary numbers that could represent any number between
0-255

Logic Gates are used in digital electronics to manipulate of binary data. This type of logic is called Boolean and was invented in the 19th century by George Boole, an English mathematician and philosopher

Boolean logic is one of the most important principles in modern computing, and uses the binary digit 1 to represent something as being ***true*** and the binary digit 0 to represent something ***false***.

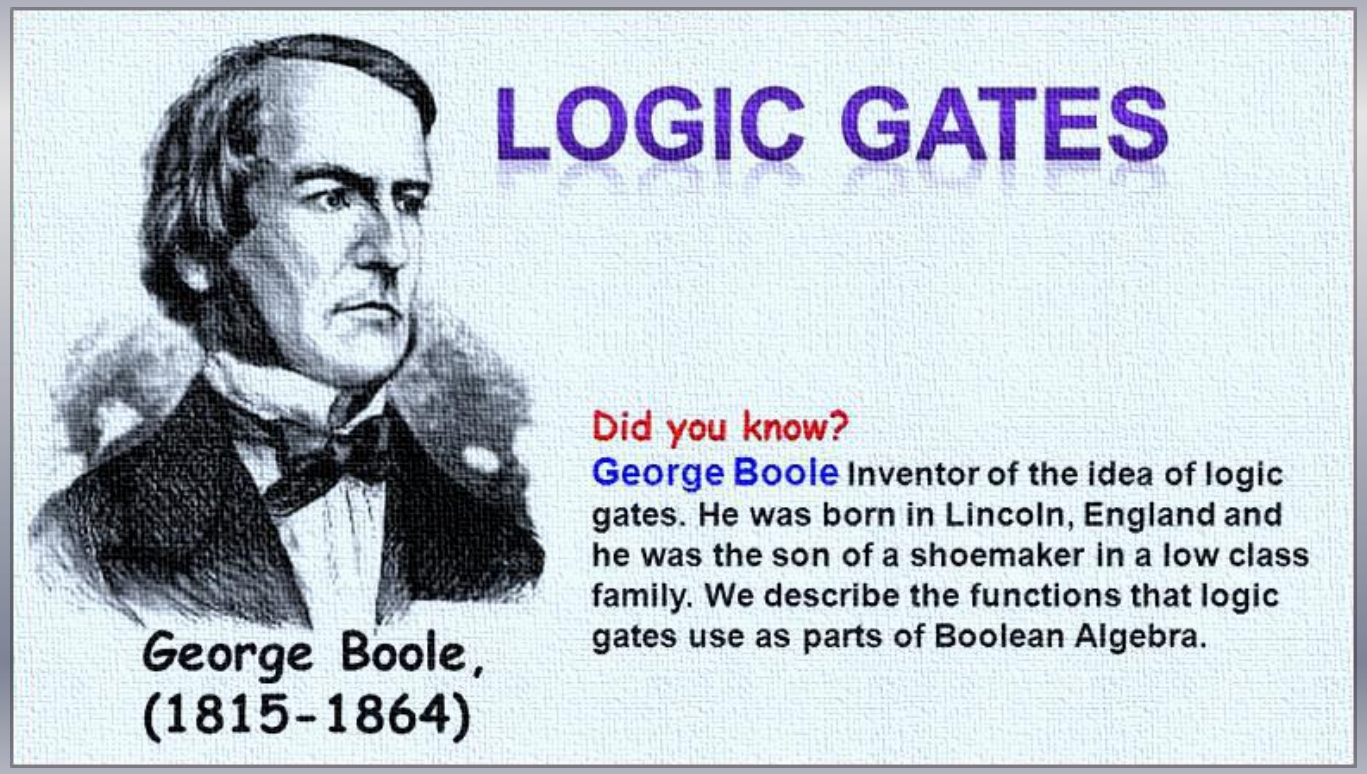
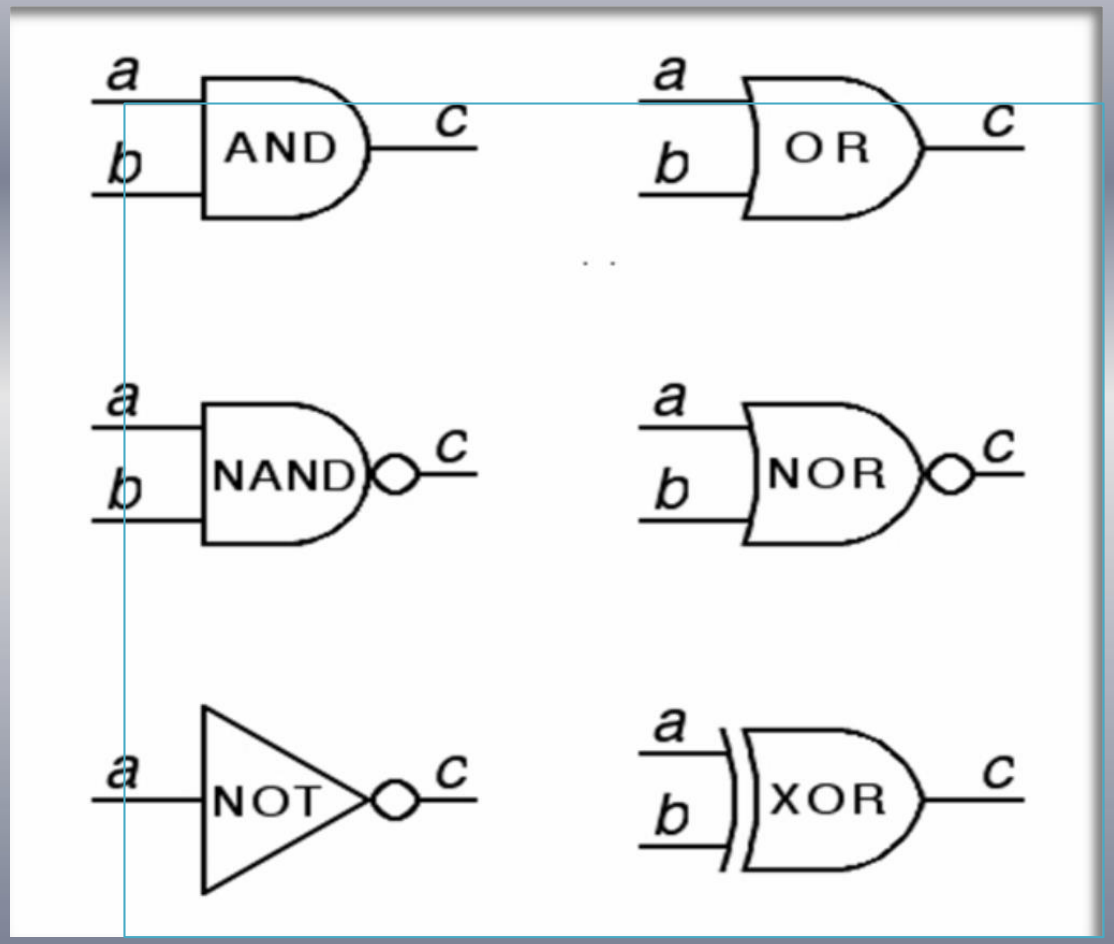
Six of the most common types of logic gates